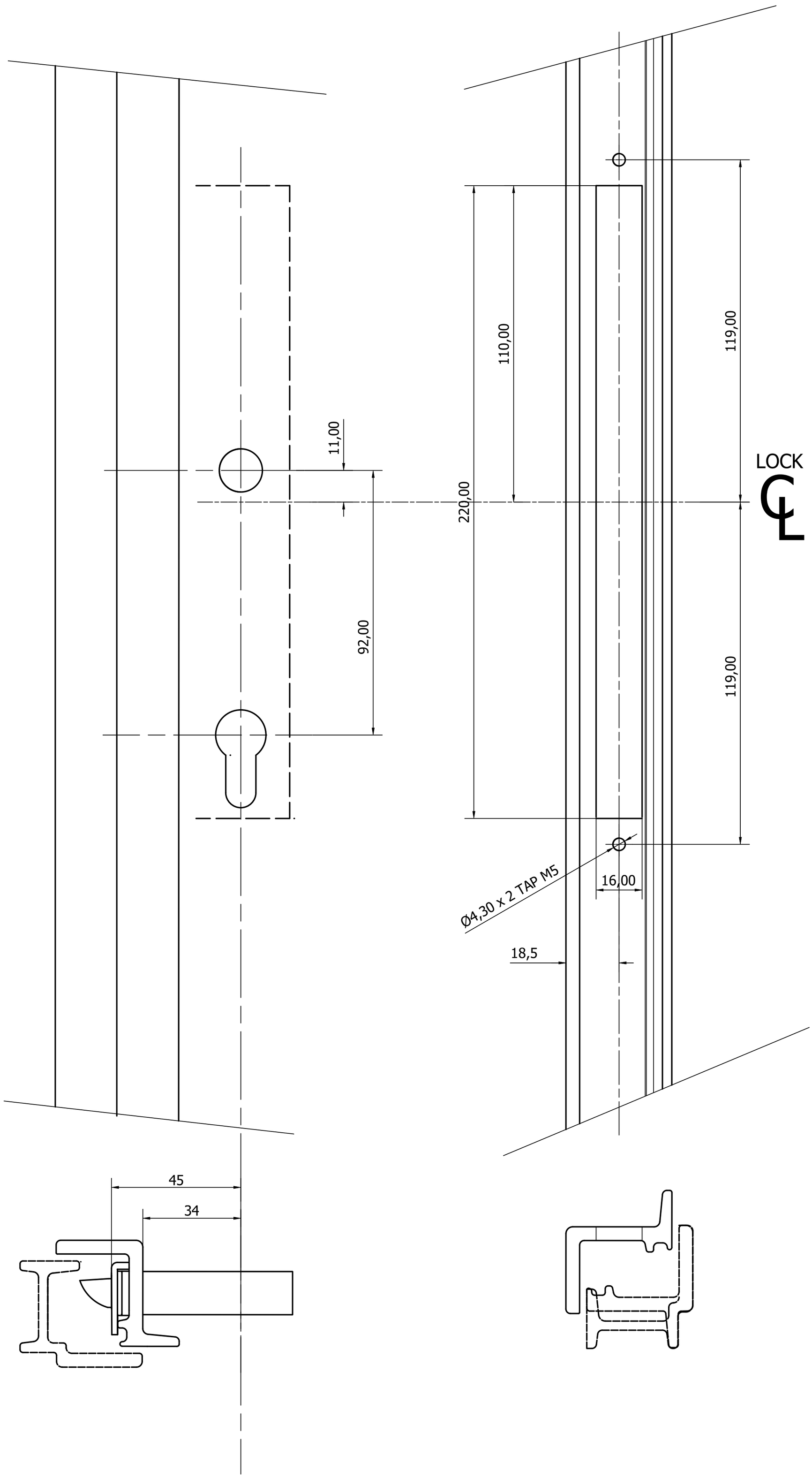

swf STEEL WINDOW FITTINGS	Issue 1	Date 12/10/2023	Material	Finish	
	Designed By terry	Checked By	Part No.		Scale @ A3
	Description W20 DOOR LOCK PREP DETAIL				Sheet 1 / 1